19.10.2016 – V1.2

Operating and installation instructions

Neutron Smart Gateway

ionSign Oy
P.O. Box 246, Paananvahe 4, FI-26100 Rauma
ionsign.fi, ionsign@ionsign.fi, tel. +358 2 822 0097
VAT FI21174499

NEUTRON SMART GATEWAY

1 General

Neutron Smart Gateway is designed for collecting and reporting pulses from different kinds of energy and utility consumption meters. The Smart Gateway directly reads meters connected to it with a Modbus fieldbus connection. Also pulse meters may be read via ionSign's Neutron15 pulse reader. After the initial setup, the unit automatically collects and transfers measurement data to the server, without separate server or user induced queries.

The Neutron Smart Gateway communicates to the server via the Ethernet/LAN network.

2 Introduction

2.1 Connect and power up

1. Connect the measuring device(s), LAN network cable and the power supply to the device. (Example connection shown at the end of these instructions).
2. When the unit is powered up, the STA LED lights for a moment, after which the STA and STB LEDs blink simultaneously.

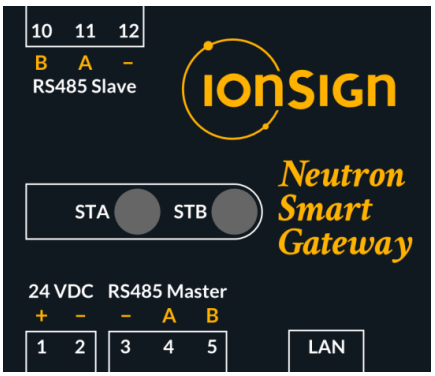

Picture 1: Device front panel.

2.2 Connecting to the device

Lantronix DeviceInstaller application is used to configure the device. The application should be installed and run on a computer that is either connected to the same local area network with the device, or directly connected to the device. The application may be downloaded from:

http://www.lantronix.com/support/downloads/?p=XPORT

If the local area network uses a DHCP server, the device, when powered up with default settings, will obtain an IP address to the local area network. The device may also use a static IP address.

1. Start Lantronix DeviceInstaller on your computer.
2. The device appears in the device list on the left, see Picture 2. The picture shows the firmware version v6.10.0.1 and device IP address 192.168.100.22. If the device does not appear, click the *Search* button.
3. Select the device by clicking its IP address. Select *Web Configuration* tab on the right side window.
4. In the address field, input 10001 as the port of the device IP address. Click on the white arrow on green background. Settings menu appears below the address, see picture 2.

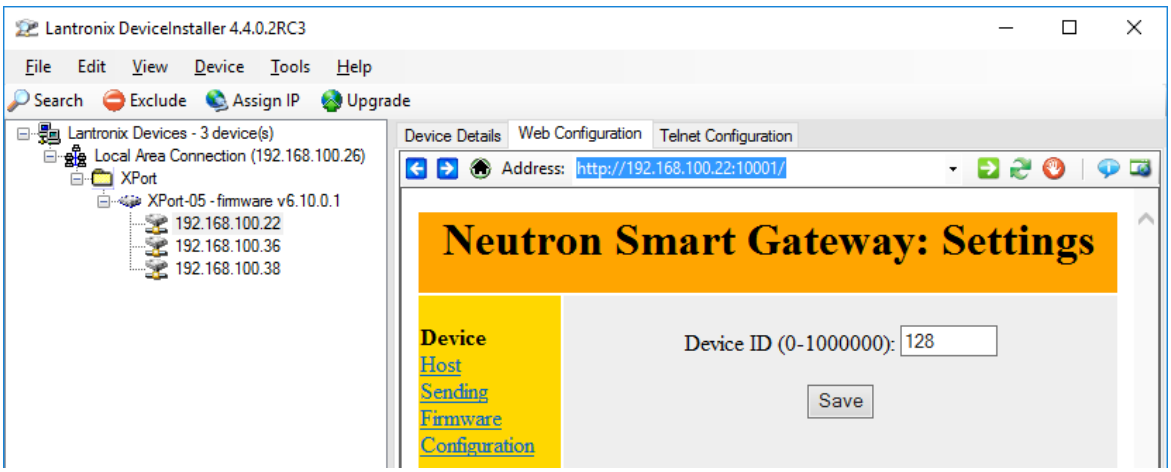

Picture 2: Lantronix DeviceInstaller application.

2.3 Device settings

The settings menu has five sections: Device, Host, Sending, Firmware and Configuration.

In the **Device** section, following parameters are given:

Device ID setting defines a unique identifier for each device. Values in the range 1-1 000 000. Value 0 indicates that the device is not operational.

Device settings example:
Setting device identifier to 128. Click on Save after entering the value.

Picture 3: Device settings.

In the **Host** section, following parameters are given:

Host address setting defines the address of the server, to which the device transmits the pulse data. The address may be input either as an IP address or in DNS format. Maximum address length is 30 characters.

Host port setting defines the number of port to be connected at the server. Values in the range 1-65535.

Host path defines the folder at the server where the pulse data is stored. Maximum path length is 30 characters.

Host settings example:
Setting host address to services.ionsign.fi, host port to 80 host path to /neutron-data/. Click on Save after entering the values.

Picture 4: Host settings.

In the **Sending** section, following parameters are given:

Periodic mode interval sets the unit to send the data of a specific time to the server, at specified intervals.

Periodic mode periodic sets the unit to send the data of a specific time period to the server, at specified intervals.

Periodic interval sets the time between consecutive data transmissions. Values in the range 0-60 minutes. This transmission takes place *in addition* to the daily transmission of hourly data. If value is set to 0, only the hourly data is transmitted, once a day.

Daily send delay sets the delay in starting the daily transmission after midnight. This enables staggered transmissions and avoids jamming of server in case of a large number of transmitting devices. Values in the range 0-60 minutes. If transmission delay is set to 0, transmission takes place at midnight sharp.

Click on Save after entering the values.

Send now button can be used to transmit the data immediately.

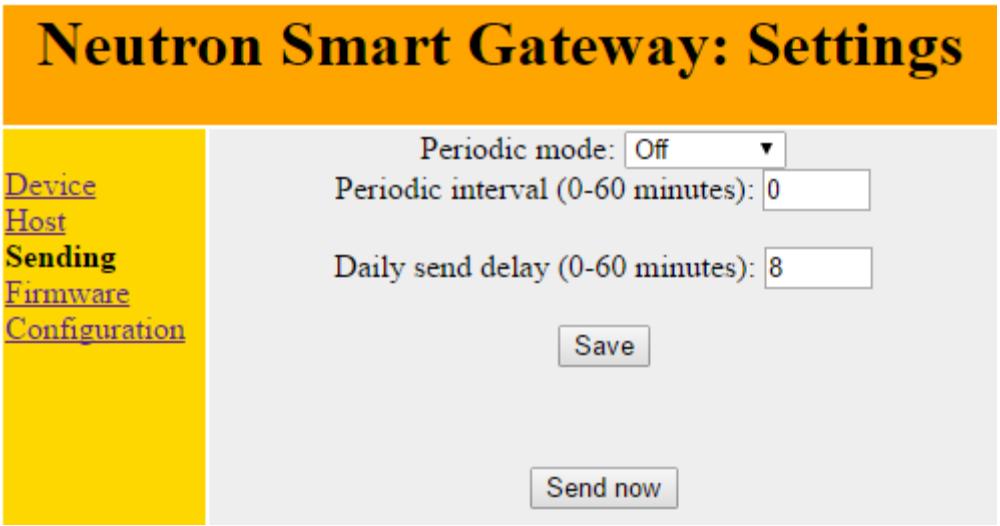

Picture 5: Sending settings.

In the **Firmware** section, following parameters are given:

Update firmware activates the remote update of firmware.

Factory reset restores factory settings.

Picture 6: Firmware settings.

In the **Configuration** section, following parameters are given:

Device slot sets the slave position of the device to be configured.

Modbus Id sets the Modbus Id of this slave position.

Slave type sets the type of this slave position.

Slave list lists the existing device configuration.

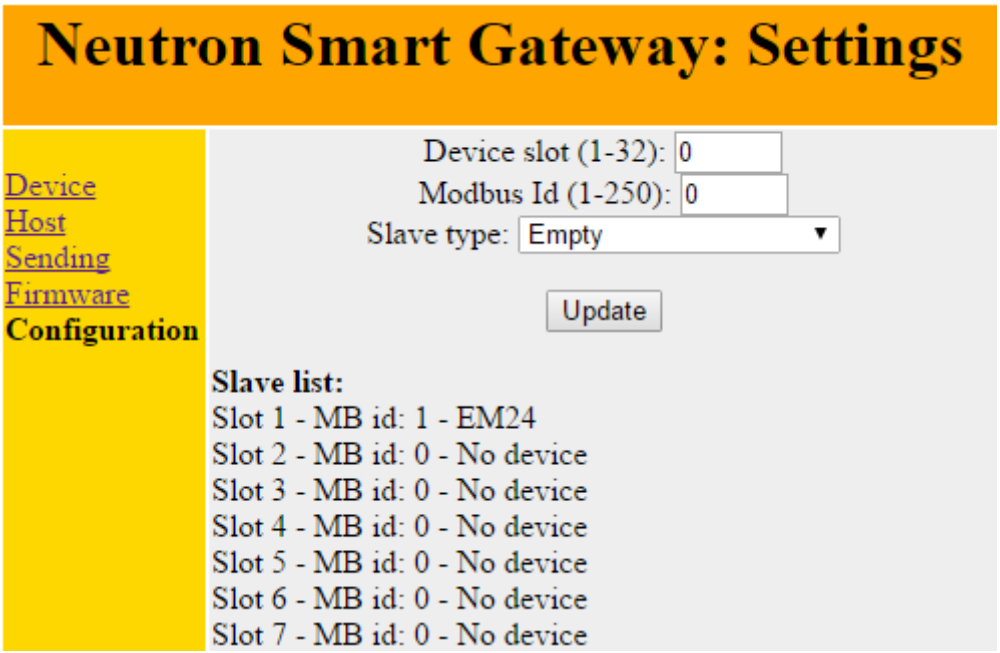

Picture 7: Configuration settings.

Neutron Smart Gateway collects and transmits the measurement data from the configured Modbus devices. The list of supported devices can be found at the device page on www.ionsign.fi.

3 LED indicators

The device has two LED indicators: STA and STB.

STA indicates the status of Modbus reading. The indicator is off, when none of the devices is responding, or when Modbus master reading has not been configured. The indicator blinks, when at least one device is not responding. The indicator is on continuously to indicate that all devices are responding.

STB indicates the status of configuration. When lit, all settings are OK and a server connection is established. Fast blinking indicates that the device is restoring factory settings. Slow blinking indicates communication to the server.

When only **STA** is lit, the device has no settings.

4 Buffer memory

The unit stores the collected data to an internal buffer memory in case of transfer network failures. When all 32 Modbus device slots are in use, the buffer has a capacity for storing 134 days of hourly consumption data. If there are unused device slots, the buffer capacity will be longer, respectively. When the transfer network is restored after a failure, the unit automatically starts sending new data and clearing the buffer to the server.

5 Neutron Smart Gateway specifications

- Integrated web server with LAN connection.
- 2 RS-485 connections (Modbus master and slave).
- Operating voltage: 12…24 VDC.
- Current consumption: 100 mA.
- Real-time clock: 4 days backup.
- Size: WxHxD 51 x 115 x 58 mm (2 module wide DIN rail enclosure).
- Protection class: IP20.
- Operating temperature: -25°C...+50°C.
- Relative humidity: 5% - 95% non-condensing.
- Local buffer capacity: 134 - 4628 days of hourly consumption data, depending the amount of configured devices.
- Data transfer capability: LAN / TCP-IP

6 Warranty

ionSign Oy agrees the warranty of two (2) years for Neutron devices. Warranty starts from the day when the customer has received the device and it concerns material and production defects. Warranty is not agreed for devices which are used or wired incorrectly. It is not also agreed for situations where defect is related to 3rd party actions. Things like this can be service changes by mobile network operator or changes in mobile network itself.

For devices which are broken during warranty time ionSign Oy delivers a new device for free. Alternatively device can be corrected. Broken device should be returned to

supplier if required. The cost of delivery is paid by supplier. ionSign Oy is not responsible for indirect or implicit damage or possible work or travel expenses related to broken device. For warranty issues please contact to ionSign Oy by e-mail: ionsign@ionsign.fi or by tel: +358 (0)2 822 0097.

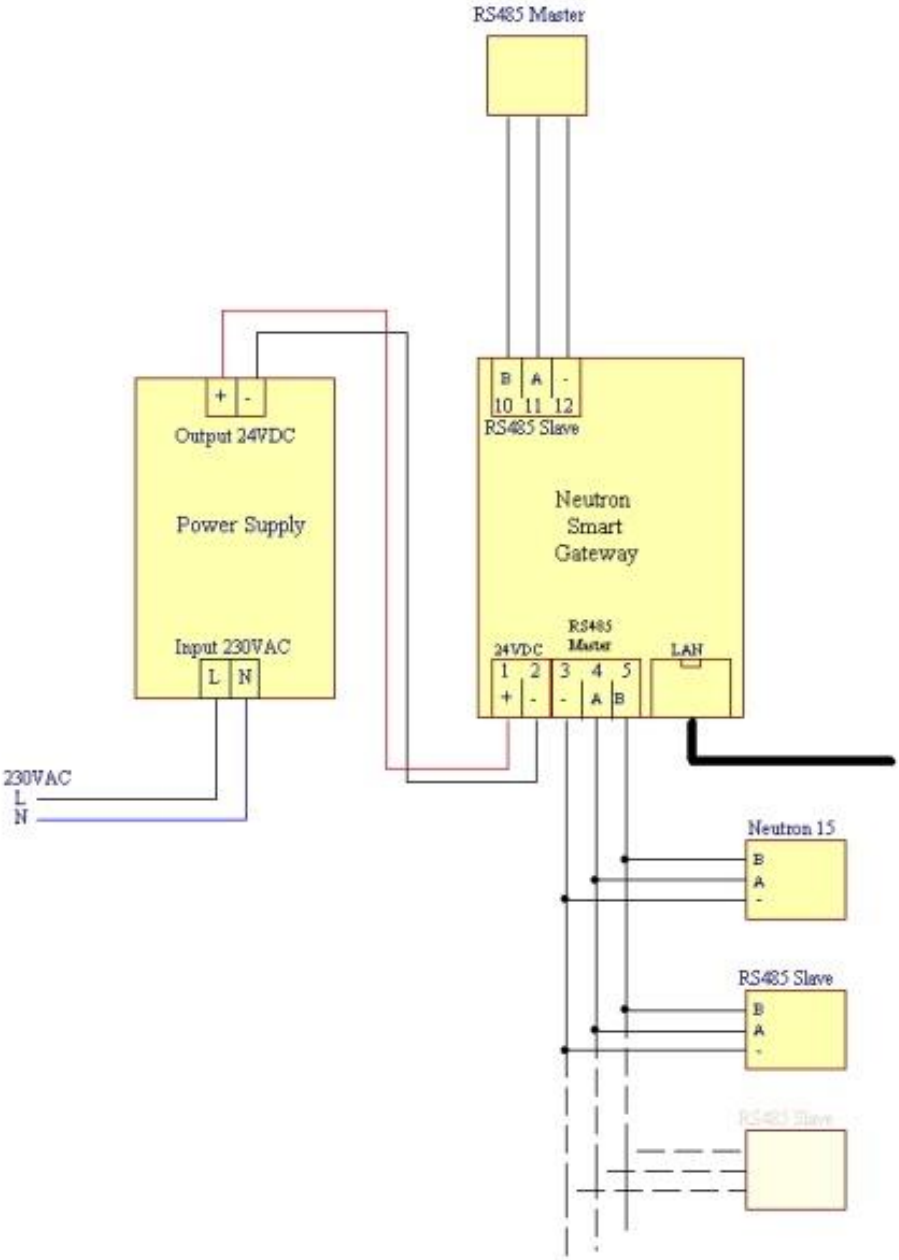

Picture 8: Neutron Smart Gateway circuit diagram.

For example JAMAK 2x(2+1)x0,5mm2 instrumentation cable can be used between metering device and Neutron device.